calculation of speed, torque and force directly on the wheel

Eingabefeld
Ausgabefeld

motor speed	motor torque	gear reduction	wheel Ø		speed AGV	speed AGV	torque AGV without efficiency loss	torque AGV at wheel tire without efficiency loss
rpm	*Nm*	*i*	*mm*		*km/h*	*m/s*	*Nm*	*N wheel*
5510	2,25	22,5	165		7,62	2,12	50,63	613,64

wheel torque [Nm]	motor torque M1 [Nm]	efficiency worm gear	reduction ratio required
10,40	0,6	0,5	34,68

drive torque M1 [Nm]	reduction ratio	efficiency	output speed n2 [1/min]	output torque M2 [Nm]	angular velocity [wheel/s]	angular velocity [°/s]	duration 360°-rotation [s]
0,6	41	0,5	73,17	12,30	7,66	439,02	0,82

Motordaten Radantrieb

Eigenschaft	Wert
No. OF POLES	14
DC LINK VOLTAGE	48 VDC
RATED POWER	1300 W
RATED TORQUE	2,25 NM
RATED SPEED	5510 RPM
RATED CURRENT	31,2 A
MAXIMUM TORQUE	- NM
INSULATION CLASS	F
WEIGHT	- KG
FEEDBACK DEVICE	Circulo 9
PROTECTION LEVEL	IP65, SHAFT SEALING IP54
BRAKE	BFK551-04

Motordaten Drehantrieb

Eigenschaft	Wert
No. OF POLES	10
DC LINK VOLTAGE	48 VDC
RATED POWER	200 W
RATED TORQUE	0,64 NM
RATED SPEED	3000 RPM
RATED CURRENT	8 A
MAXIMUM TORQUE	1,91 NM
RESISTANCE LINE-LINE	N/A
INDUCTANCE LINE-LINE	N/A
ELECTRICAL TIME CONSTANT	2 ms
MECHANICAL TIME-CONSTANT	1,3 ms
VOLTAGE CONSTANT	10V/KRPM
TORQUE CONSTANT	0,09 NM/A
ROTOR MOMENT OF INERTIA	$0{,}42 \times 10^{-4}$ KG.m²
INSULATION CLASS	F
MAX. RADIAL FORCE	180 N
MAX. AXIAL FORCE	90 N
WEIGHT	1 KG
FEEDBACK DEVICE	BR10 & Circulo 9
PROTECTION LEVEL	IP65, SHAFT SEALING IP54
BRAKE	None

gearbox data

property	value
reduction worm gear	41
max. adjustment time/revolution	0,7 s
output torque at rated data	12,3 NM
dimensions	68,5(H) x 330(L) x 198,5(B) mm

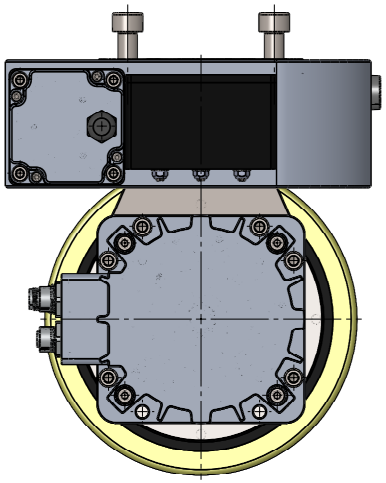

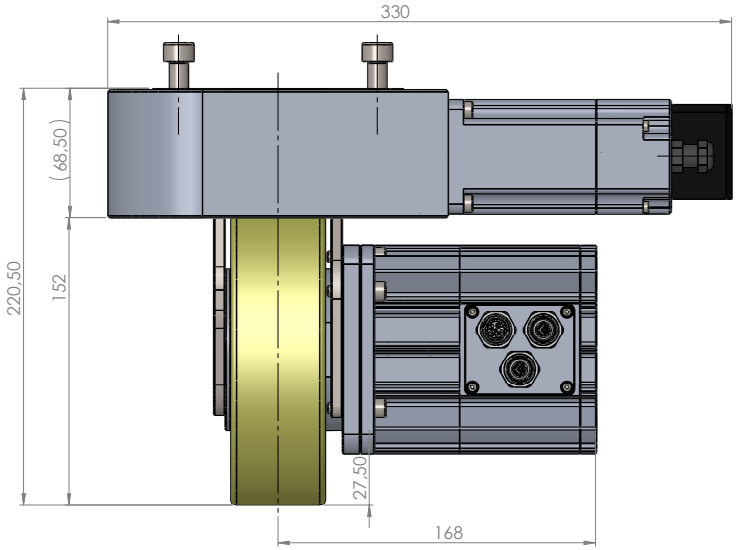

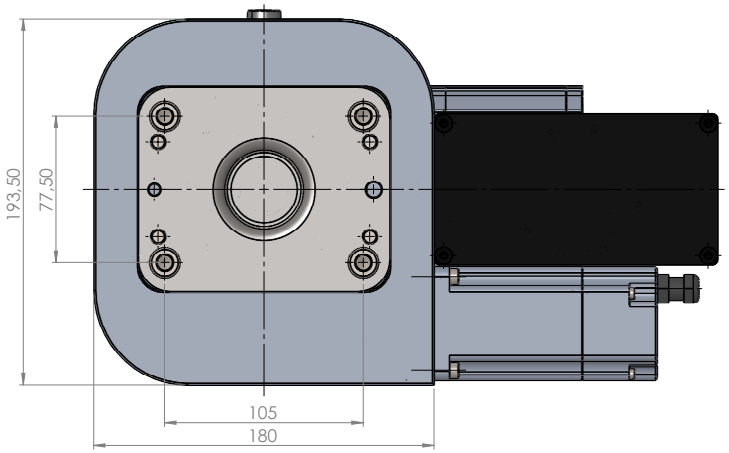

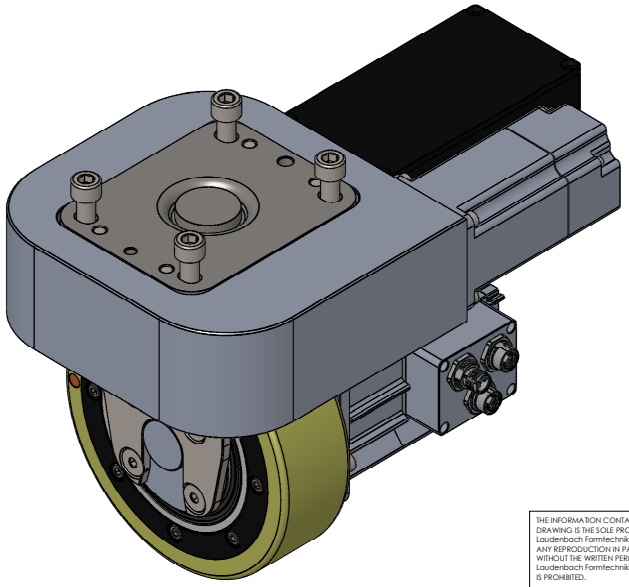

THE INFORMATION CONTAINED IN THIS DRAWING IS THE SOLE PROPERTY OF Laudenbach Formtechnik GmbH & Co KG. ANY REPRODUCTION IN PART OR AS A WHOLE WITHOUT THE WRITTEN PERMISSION OF Laudenbach Formtechnik GmbH & Co KG IS PROHIBITED.

projection:	gen. tolerances	tolerances plastic moldedparts	tolerance	material:
Metrisch	ISO 2768-mK	DIN 16742-TG4	ISO 14405(E)	heat treatment:
				surface treatment:

filename: 12100_21_05_000A_omnidirektionaler Antrieb_Datenblatt_Englisch
volumen: 4382462.47 cm³
weight: 18508.05 g

index	day	name	date/checked		day:	name:
				signed	01.02.23	LL
				checked	02.02.23	LL

status:

scala: 1:2
designation: omnidirectional drive
format: A2
drawing number: 12100_22_06_000A
index

Laudenbach
Formtechnik
D78559 Gosheim
Am Sturmbühl 6
Gear Mountain
Laudenbach Formtechnik